WIRING DIAGRAM
50/75/100

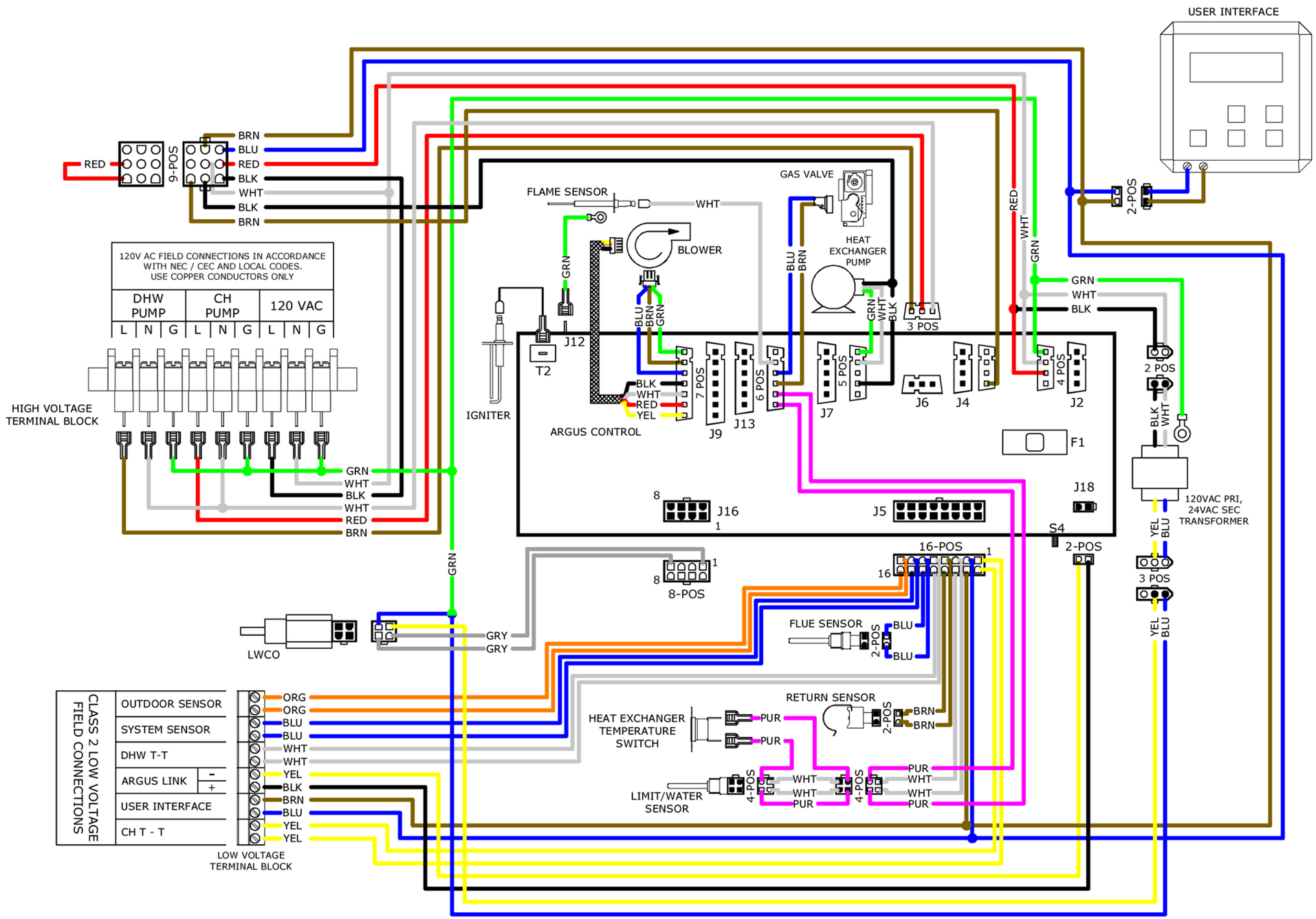

240009479 REV C [10/04/2014]

WIRING DIAGRAM
50/75/100
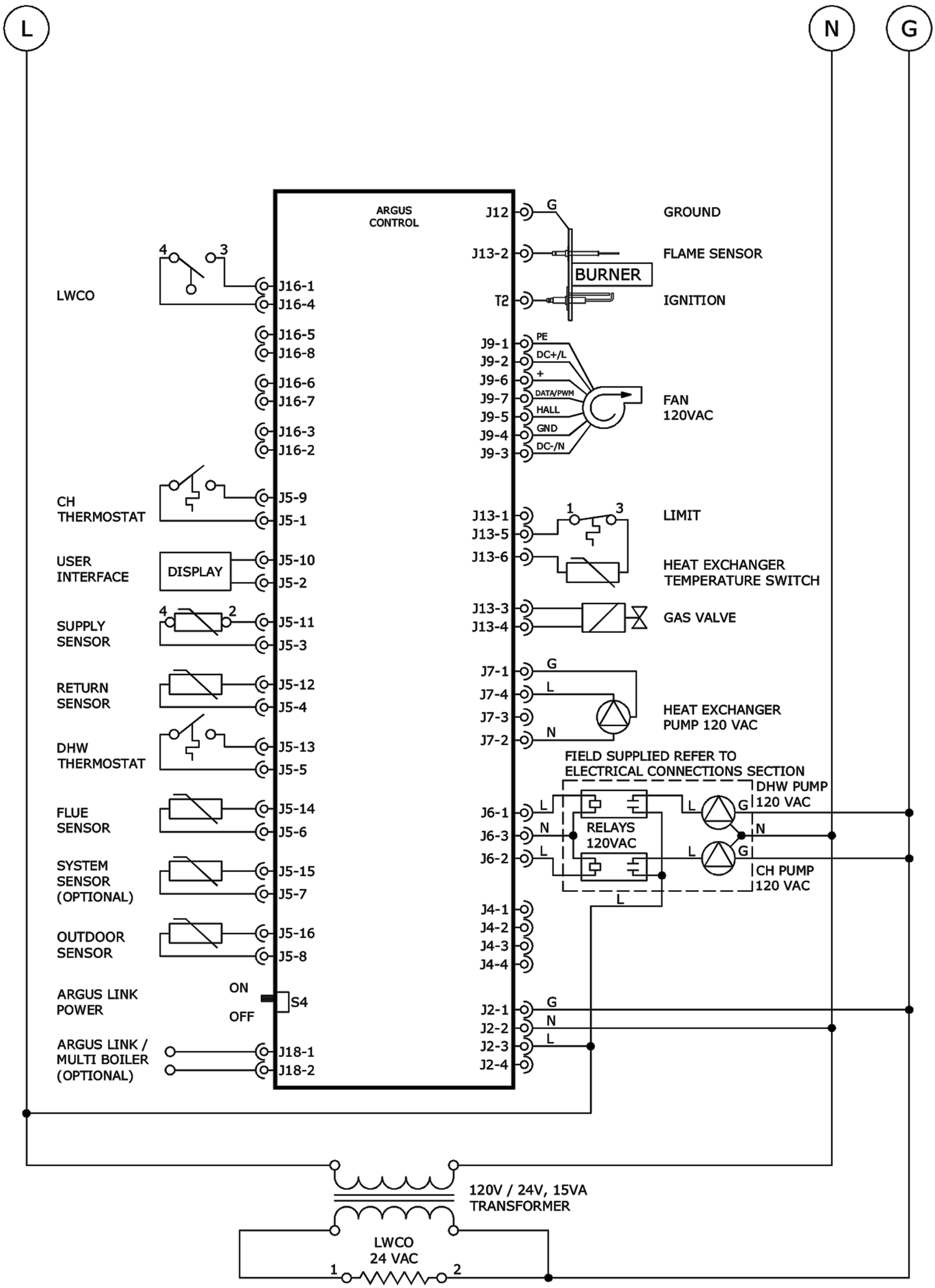
240009479 REV C [10/04/2014]